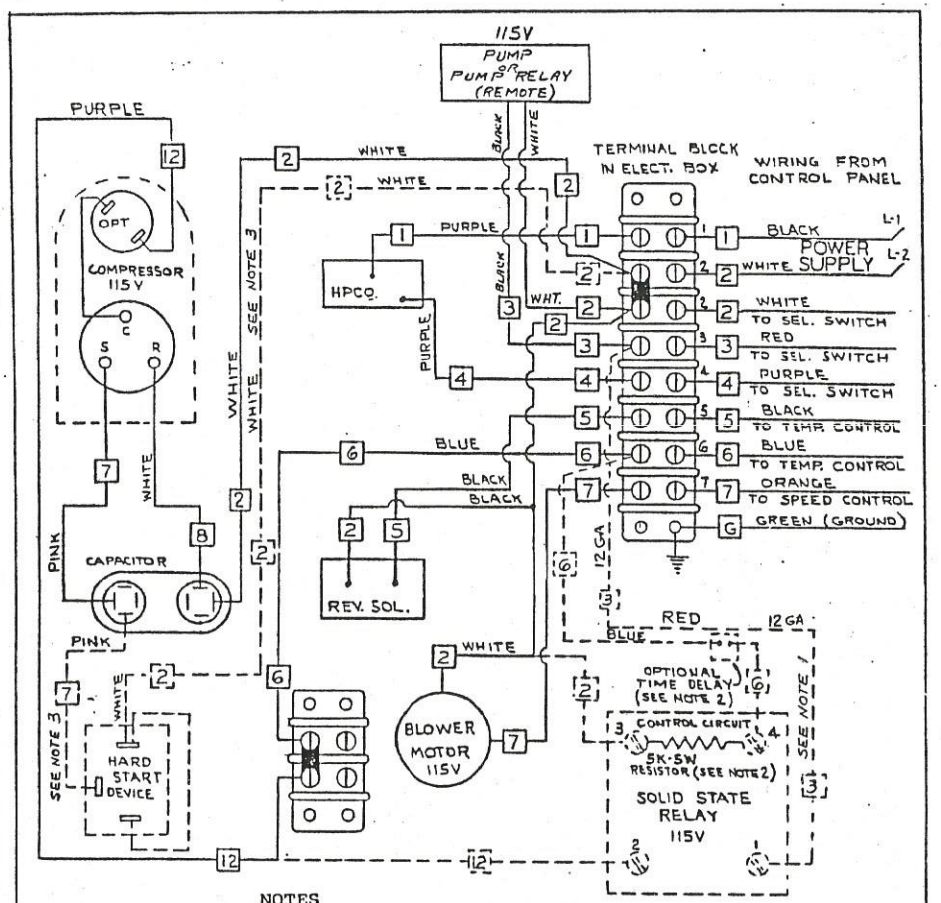

NOTES

1. SOLID STATE RELAY AND RELATED WIRES (BROKEN LINES) REQUIRED WITH DIGISETTE CONTROL.
2. RESISTOR—USE ONLY WHEN USING OPTIONAL TIME DELAY.
3. HARD START DEVICE OMITTED ON 6000 BTU UNIT (LPSC-06H).

Rev	Description	By	App'd
A	RED WIRE # 3 FROM SOLID STATE RELAY WAS PURPLE (DWG ONLY)	D.E.C. 10-31-85	

DESCRIPTION: LP & VB WIRING DIAGRAM - COMPONENT
TYPE: HEATING AND COOLING
SIZE: 6000, 9000, BTU
VOLTAGE: 115V-AC
DWN. D.E.C. DATE 9-11-85
APP. DATE
PART NO. LUM-079 REV. A

LUNAIRE MARINE
4 QUALITY STREET
WILLIAMSPORT, PA 17701
(717) 326-1770

MODEL(S) LPSC-06H, 09H
VBSC-09H

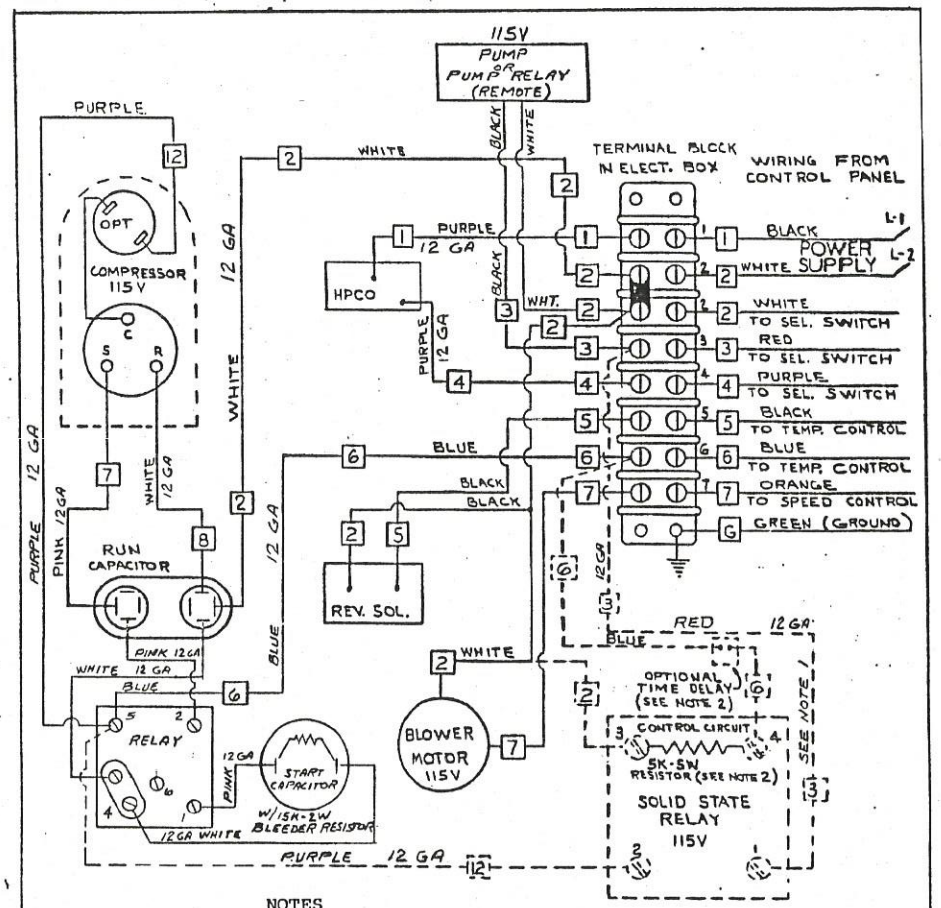

NOTES

1. SOLID STATE RELAY AND RELATED WIRES (BROKEN LINES) REQUIRED WITH DIGISETTE CONTROL.
2. RESISTOR—USE ONLY WHEN USING OPTIONAL TIME DELAY.

Rev	Description	By	App'd

DESCRIPTION: LP & VB WIRING DIAGRAM - COMPONENT
TYPE: HEATING AND COOLING
SIZE: 12000, 16000 BTU
VOLTAGE: 115V-AC
DWN. D.E.C. DATE 9-11-85
APP. DATE
PART NO. LUM-080

LUNAIRE MARINE
4 QUALITY STREET
WILLIAMSPORT, PA 17701
(717) 326-1770

MODEL(S) LPSC-12H, 16H, TESC 12H, 16H, VBSC-12H, 16H

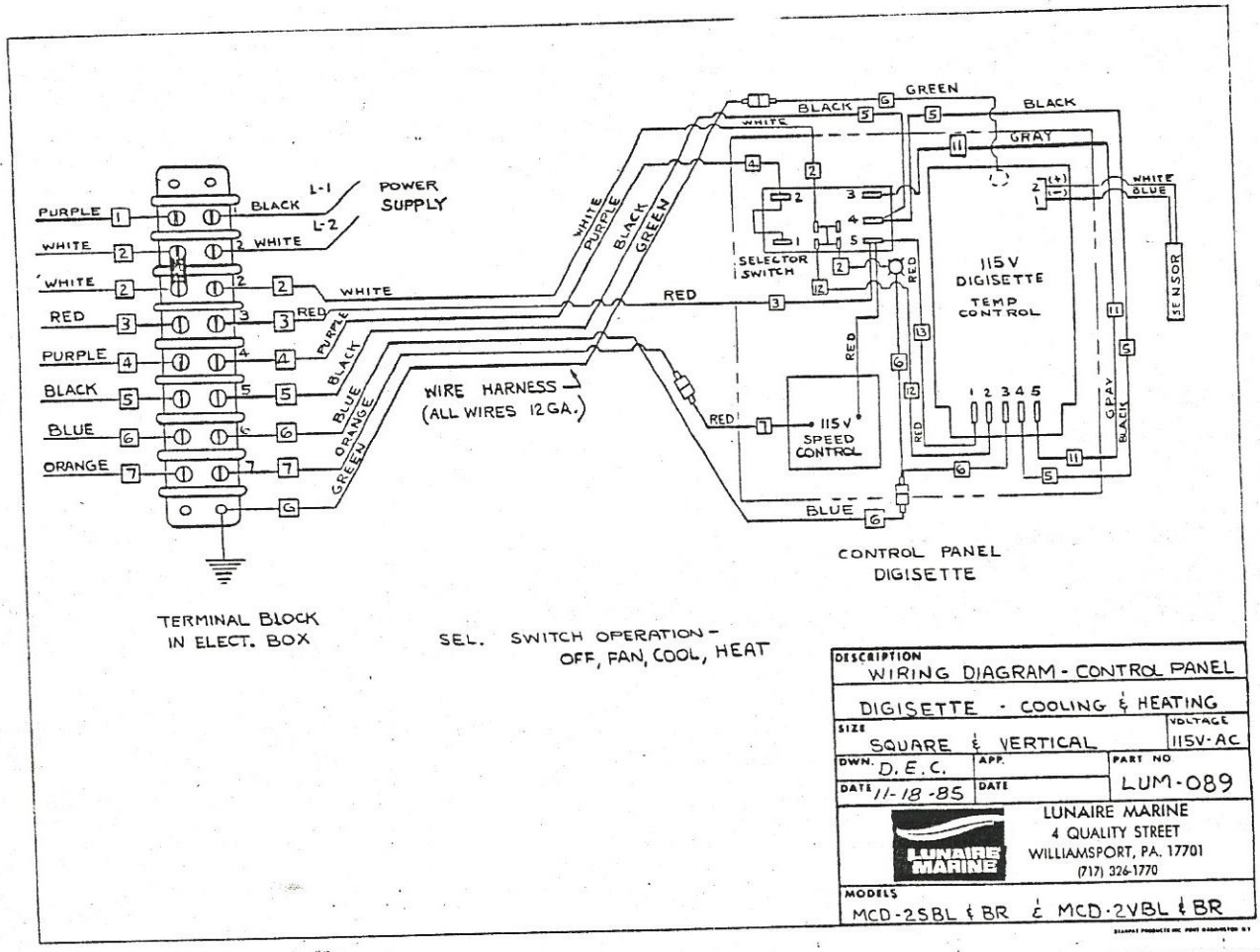

DESCRIPTION	WIRING DIAGRAM - CONTROL PANEL
	DIGISETTE - COOLING & HEATING
SIZE	SQUARE & VERTICAL
VOLTAGE	115V-AC
DWN.	D.E.C.
APP.	
DATE	11-18-85
DATE	
PART NO	LUM-089
	LUNAIRE MARINE 4 QUALITY STREET WILLIAMSPORT, PA. 17701 (717) 326-1770
MODELS	MCD-2SBL & BR & MCD-2VBL & BR

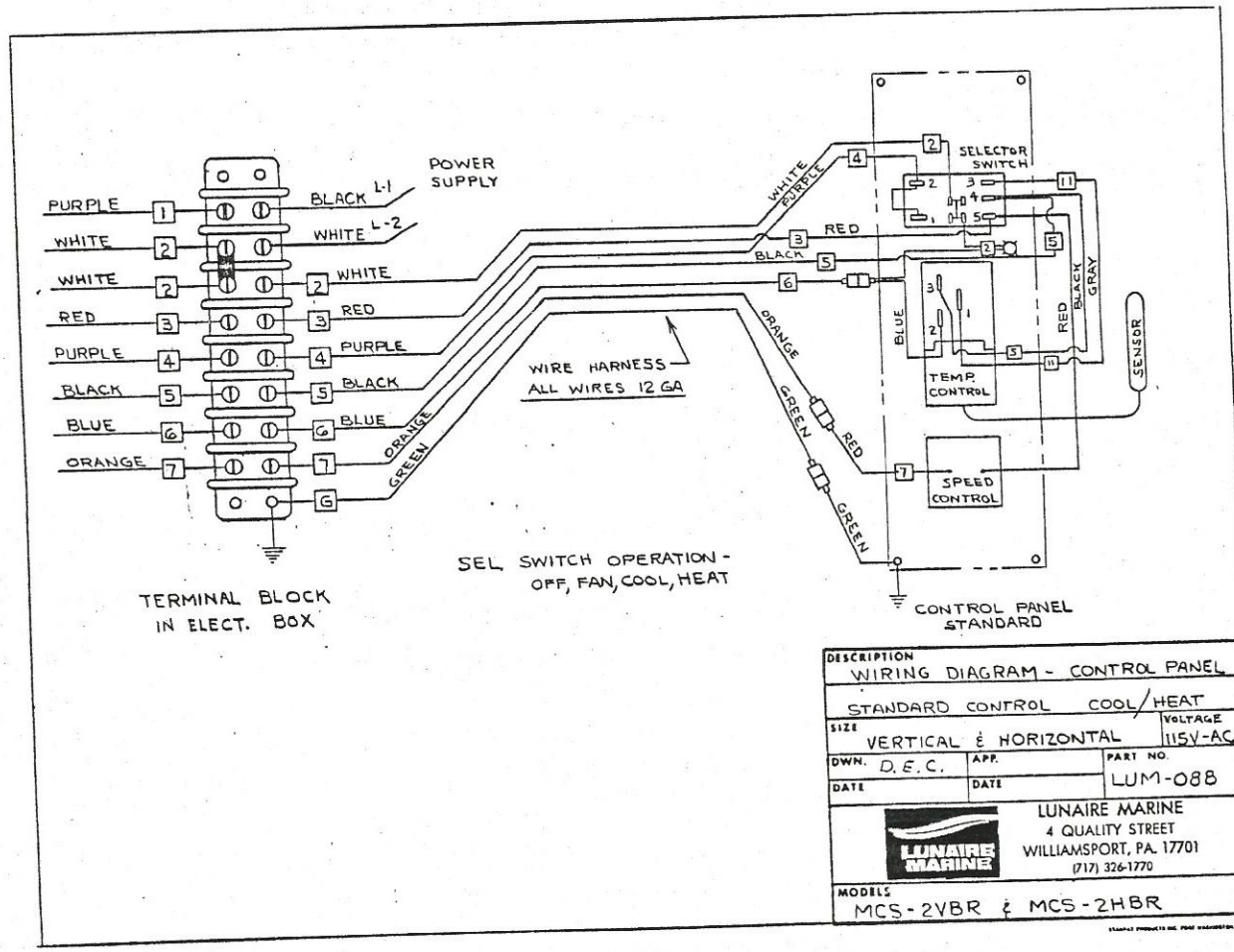

DESCRIPTION	WIRING DIAGRAM - CONTROL PANEL
	STANDARD CONTROL COOL/HEAT
SIZE	VERTICAL & HORIZONTAL
VOLTAGE	115V-AC
DWN.	D.E.C.
APP.	
DATE	
DATE	
PART NO.	LUM-088
	LUNAIRE MARINE 4 QUALITY STREET WILLIAMSPORT, PA. 17701 (717) 326-1770
MODELS	MCS-2VBR & MCS-2HBR